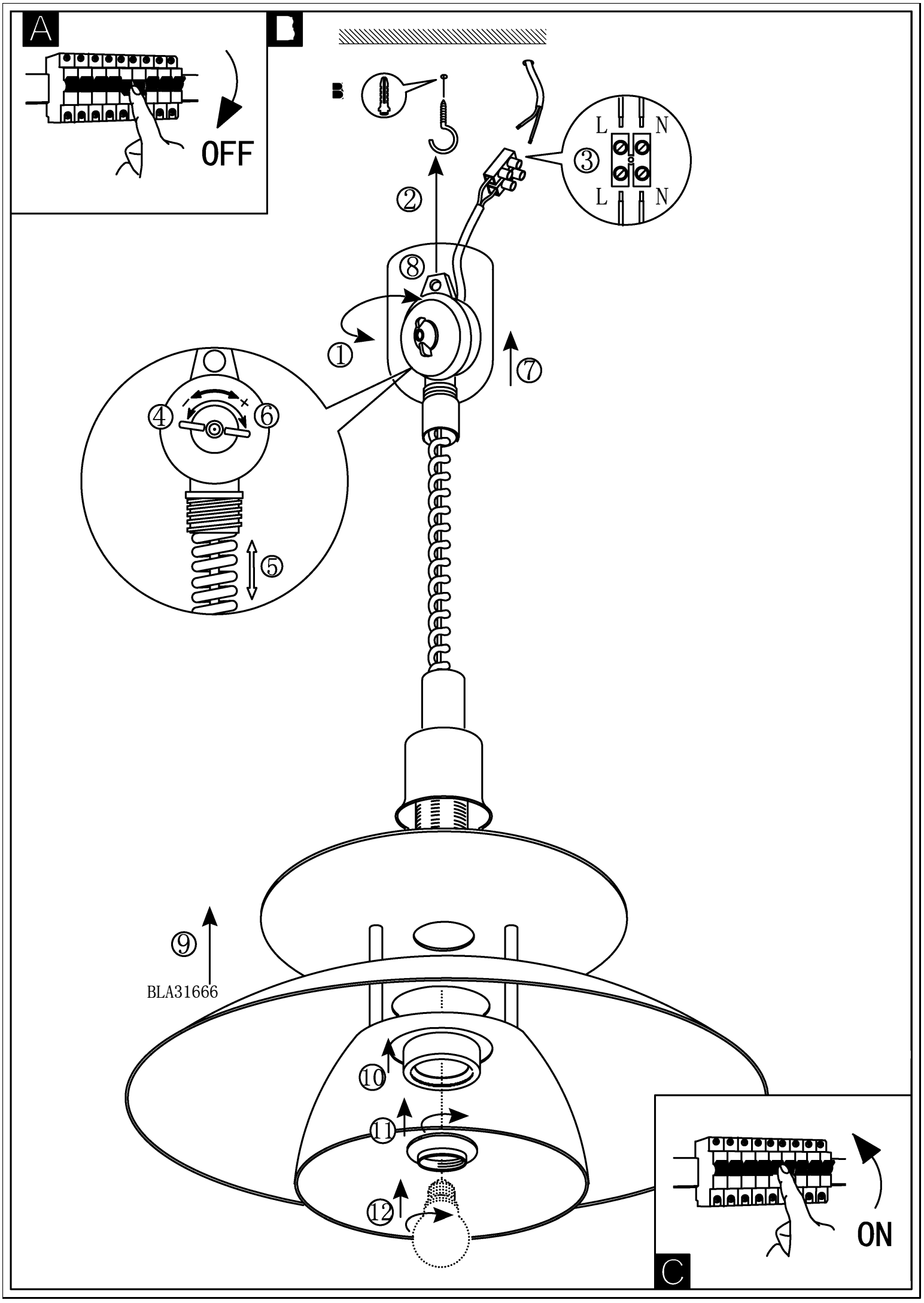
A
OFF
B
L
N
L
N
①
②
③
④
⑤
⑥
⑦
⑧
⑨
⑩
⑪
⑫
BLA31666
C
ON