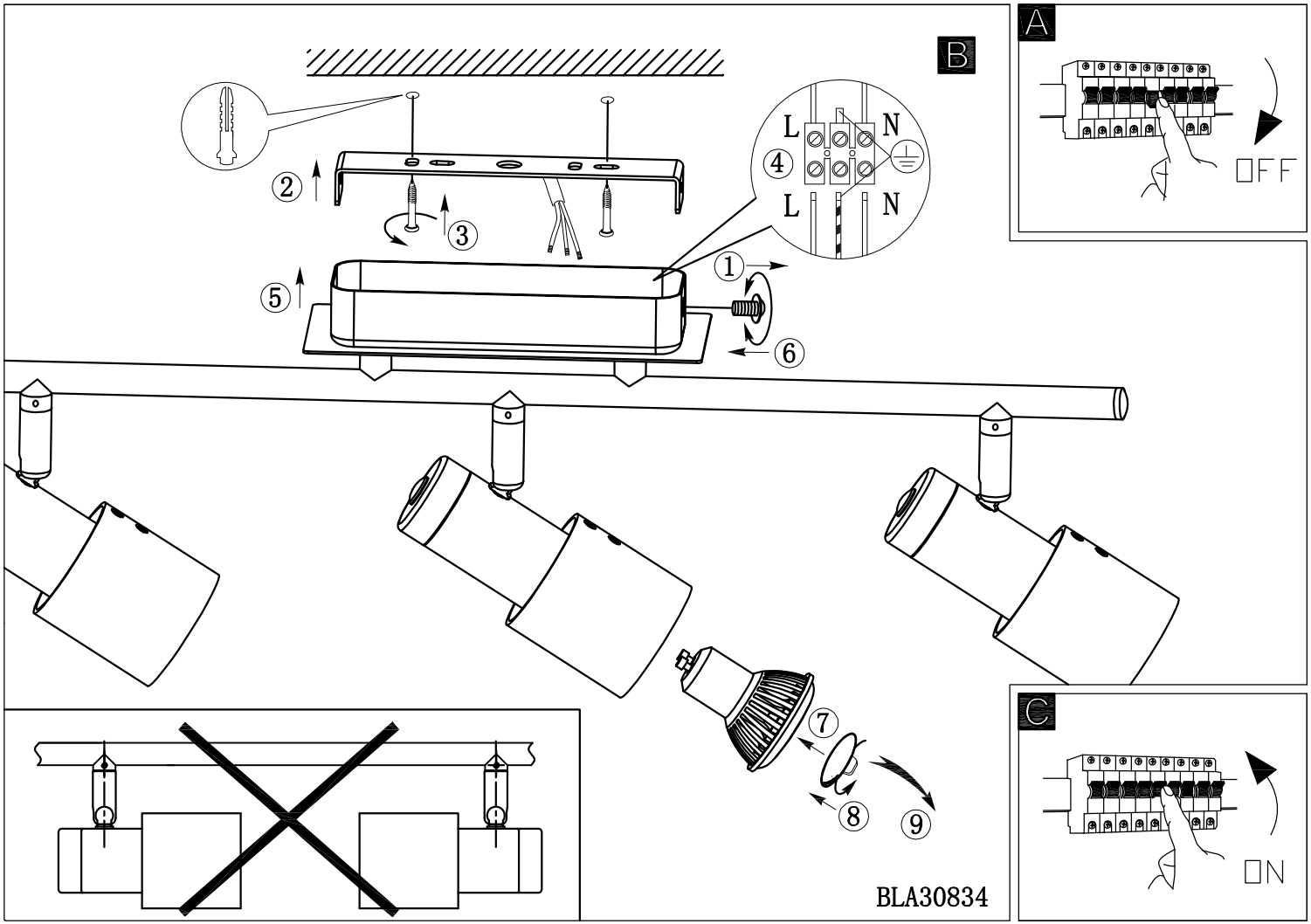
A
OFF
B
L
N
L
N
1
2
3
4
5
6
7
8
9
C
ON
BLA30834